Data Capture Technologies – Project Report

In many secure environments such as an office building, access control with the use of RFID door locking systems play a vital role when it comes to ensuring the safety and security of information and individuals. With most RFID scanners, they the lack the ability to record data such as when and which RFID tag are being scanned, making it extremely more difficult for admins or security personnel to review any unauthorized access attempts. With the inability to record timestamps and log other specific information such as the RFID card that was scanned, it reduces the effectiveness and accountability of the security measures in place. Moreover, in the realm of smart homes, with the basic RFID scanners that are available, smart home systems miss out on potential automation opportunities based on the user's behaviour, such as adjusting the lighting, air temperature or blinds as they don't capture any data to be processed. With the absence of this feature, existing RFID scanners lack the ability to seamlessly integrate with other smart home features, undermining the ability to enhance security. It also diminishes the potential for a truly smart home system.

By integrating an RFID door locking system with a real-time clock (RTC) and data logging capabilities, it allows us to effectively track and record each time an RFID card was scanned, including its date, time, card ID and the access status. With these advancements, it will offer better security insights, allowing people such as administrators or security personnel to accurately pinpoint any unauthorized access attempts. With the timestamps in hand, it will make it easier to validate the access attempts with surveillance footage or other security measures. Not only can the RFID data be collected for security purposes, but it can also be sued to improve quality of life for users. By analysing the patterns of entry and exit times from the RFID door locking system data, we can predict the daily habits and routines of the people that live there. Accurately predicting these patterns will enable the smart home system to autonomously adjust the lighting, temperature, blinds and entertainment preferences. By doing this, it will enhance the users overall experience and satisfaction. Some questions that this project raises are how the collected data can be better utilised to improve the overall security and predictability for the user? Also, in relation to smart home integration, how can the RFID scanners data be effectively integrated with other smart home systems to automate the user's day to day life with personalised experiences? How accurate are the predictions with the RFID scanner data and the algorithms put in place? How will mistakes in predictions affect the users experience with the system? There are many things to take into consideration when developing this system into smart homes, including the negative effects on the user and privacy concerns.

Approach:

The primary focus of this project is to provide a robust security system by logging both authorised and unauthorised access attempts, enabling for easier pinpoint detection of who and when tried to access a restricted room. Figure 1 is a basic representation of the system and how each component are connected, while figure 2 is a real world picture of the system. There is also a focus on smart home integration where the RFID scanner is able to seamlessly integrate into a smart home ecosystem. Not only can the RFID door locking system be used for home security, but it can also be used as a proactive component that understands household patterns and automates various functionalities that are personalised to the user.

Technology and resources used:

1. RFID module: This reads the RFID tag number.
2. Microcontroller (Arduino Uno): Processed the data from the RFID module and controls the other components. Code is compiled and run through the Arduino Uno.
3. Data logging shield: This is an attachment to the Arduino that allows for data to be captured onto an SD card.
4. Real-Time clock: Accurately timestamps each access.
5. Servo Motor: Allows for the door lock pin to be moved in and out.
6. Breadboard: Allows for temporary circuits to be made for Arduino Uno.
7. Jumper wires: carries a signal from one component to the other.
8. LED lights: 1 blue and 1 red LED light that gives a visual que and flashes based on the scanned card.
9. Buzzer: Allows for an audible que as to the type of access given.

Connections:

- **RFID Module:**
  - SDA pin connected to digital pin 2 on Arduino.
  - SCK pin connected to digital pin 13 on Arduino.
  - MOSI pin connected to digital pin 11 on Arduino.
  - MISO pin connected to digital pin 12 on Arduino.
  - GRN pin connected to ground pin on Arduino.
  - RST pin connected to digital pin 9 on Arduino.
  - 3.3V pin connected to 3.3v pin on Arduino
- **Servo motor:**
  - Signal pin connected to digital pin 5 on Arduino.
  - Power pin connected to 5v rail on breadboard.
  - Ground pin connected to ground rail on breadboard.
- **Breadboard:**
  - 5v and ground extended onto breadboard.
  - Buzzer positive terminal connected to pin 8 on Arduino and negative terminal connected to ground on breadboard.
  - LED positive terminal connected to digital pin 6 and 5 on Arduino through a resistor and negative terminal connected to ground on breadboard.

Figure 1

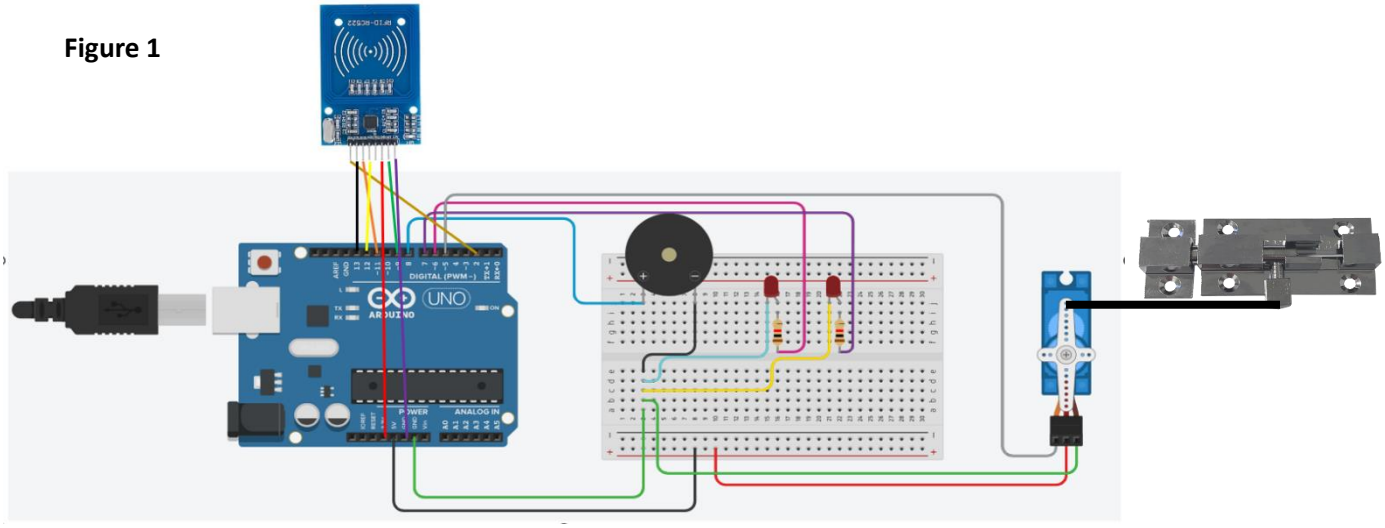

Figure 2

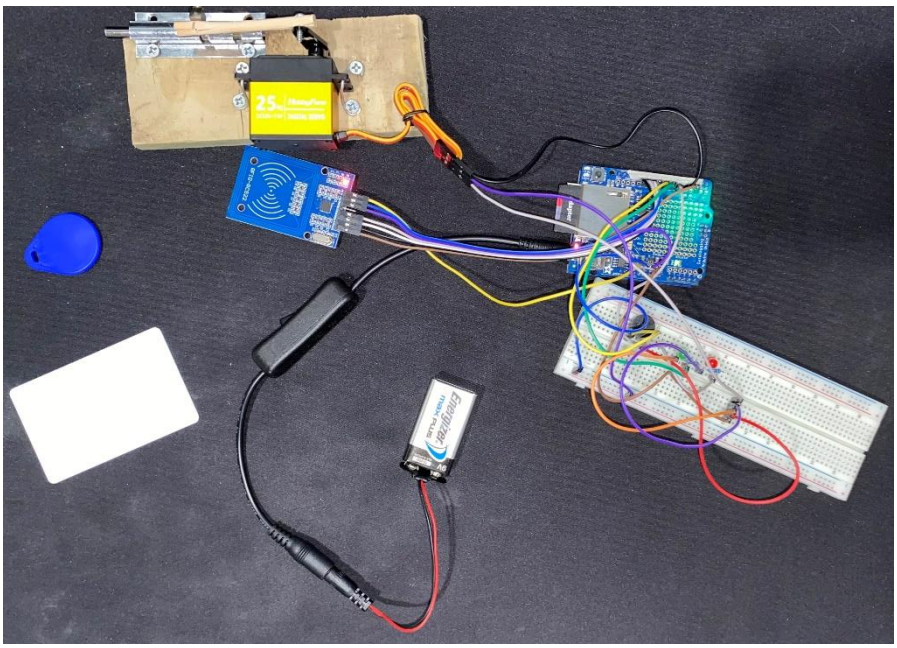

Data collection process:

The Initial stage of the data collection process is with the RFID (Radio Frequency Identification) card scanning. RFID cards contain serial numbers that get detected and read by the scanner each time they are brought into its proximity. With some simple lines of code, I am able to only allow a specific card serial number to “gain access” into the system. To facilitate this access into the system, the code cross-references the scanned RFID card serial number against a predetermined list of allowed serial numbers. Additionally, to timestamp each scanning event, the Real-Time Clock module has been integrated. With the inclusion of the RTC library, I was able to make an RTC object to retrieve the date and time an action was made, that being when a card was scanned. The heart of the operation lies win the microcontroller (Arduino Uno). Its role is to check the scanned RFID against a list of authorised RFID tags. When the presented RFID tag's serial number aligns with one that's pre-encoded in the system, the microcontroller marks that event as “Access Granted”. Conversely, if there's no matching serial number found, the system responds with an “Access Denied” status. This way, we have a controlled and monitored access mechanism in place, powered by the combination of RFID technology, an RTC module, and a robust microcontroller.

Cleaning data, especially in a format such as excel, is essential for ensuring accuracy in analysis and reporting. Some of the ways I was able to clean the recorded data was to remove any duplicates. These can arise from multiple data entries, merging datasets or technical glitches in data collection tools such as the Arduino data logging shield. To reduce the likelihood of any duplicates, I have implemented a delay between each RFID scan, meaning that even if there was a card continuously help up against the scanner, it would only detect the card after 1 second has passed. If there still were some duplicates in data collection, cleaning the data can be done by using excels in built “remove duplicates” tool. There may also be data entry errors. Any manual data entries could include typos, misspellings or other simple mistakes such as incorrect formatting. In order to clean the data and remove any issues, the use of spell checkers or pattern recognition will be effective, but the most vital way is to not use any manual entries of data.

Ethical concerns:

Collecting, storing and analysing data captured from the RFID scanner system will raise multiple ethical concerns relating to the user's privacy, data security and data retention issues. When an RFID card is scanned, it will collect data such as the date, time and unique card serial number. In most cases, an RFID card will be tied to a specific person, and thus it is essentially tracking their movements throughout the day. Having this data about a person's movements and their whereabouts, algorithms can be made to track the habits daily movements and routines of a person. If this data is collected over a significant amount of time, the data can provide a real insight to the type of person they are and what their day-to-day activities are. Users of this RFID door locking system will need to give their full consent to the data being collected and how it will be used. They should also be given transparency about why the data needs to be collected. This could be done through the use of a terms and conditions agreement or verbally explained in person.

Another ethical concern that needs to be taking into consideration is the security of the data. As of now, the data collection process takes place in an SD card on the Arduino Uno. If a cyber criminal was to have access to this locally stored data, there would be lots of privacy issues. This data can be used for a variety of intended purposes such as blackmail, burglary as they may know when the user is not at home, or even corporate espionage which refers to the illegal practices employed by corporations to obtain confidential information about other competitors. The stored data on the SD card is very desirable for criminals, and without any encryption, it can lead to significant privacy issues for users.

Data retention as another ethical concern that needs to be taken into consideration when it comes to capturing data for this RFID door locking system. Data retention refers to the policies and practices that dictate how long data is stored and how it is being kept. For my RFID door looking project, this would relate to how long the logs of the date, time and other card information are kept and stored in the system. The longer the data is retained in the SD card, the longer it poses a potential privacy risk to the users. If data logs from several years ago are accesses, it may reveal certain information about the users' habits and patterns in their day-to-day life at the time. However, this data may not be relevant to them anymore, and what was accurate a year ago, may not be the case now.

Given these concerns, it is essential to establish clear guidelines and follow all protocols surrounding data collection and storage. Additionally, implementing privacy, data security and data retention principles from the outset of the project will mitigate any potential ethical issues in the future.

Results:

The RFID door locking system was setup in a controlled environment where each RFID card scan was recorded, and it logged the date, time, card ID and access status onto an SD card on Arduino Uno. Data on the SD card is stored neatly in a csv file that can't be edited and saved, meaning that there shouldn't be any manually written inputs into the data. Over a set period of time, the frequency and patterns of access attempts, both authorised and unauthorised were monitored. Analysing the collected data, it is clear to see that there were significantly more "Access Granted" attempts compared to the "Access Denied" attempts, particularly due to the user having the correct key to open the lock. The ability to log each access attempt in real-time provided an immediate understanding of when and how often access points were used. It was observed that unauthorised access attempts could be easily flagged, and potential breaches could be attended to easily.

Even though the system doesn't have any capability to directly analyse the data and integrate it with other smart home devices, the collected data presents a clear foundation for this capability to make its way into the RFID door locking system in the future. Recognizing patterns, such as the time of day a resident commonly returns home, could be utilized in future developments to trigger smart home actions. The systems structure is based on scalability, allowing for future improvements for the system. With more advanced software and code, the RFID and RTC module can be further analysed to predict patters and provide more insights for potential home automation. With the project hardware, the implementation of a lcd screen will allow the user to get instant feedback on the success of the card scan. Instead of relying on the LED's and buzzer signals to indicate whether access has been granted or denied, an LCD can provide clear textual feedback to the user. The lcd screen could also be used to provide the user with error messages, allowing users to understand and potentially rectify issues. It could also be used to display personalised messages upon access. If there were multiple people with different RFID tags, there could be a personalised message such as "Welcome [Username]" when an authorised card is scanned. Figure 3 paints a picture of the total number of 'Access Granted' and 'Access Denied' attempts throughout the recorded hours. This allows us to identify the times of day when access (either granted or denied) is most frequently attempted, which can indicate peak usage or activity periods. Figure 4 provides a visual comparison between the total number of 'Access Granted' and 'Access Denied' attempts, side by side. By placing these values adjacent to each other, we can quickly gauge the proportion of successful and unsuccessful access attempts.

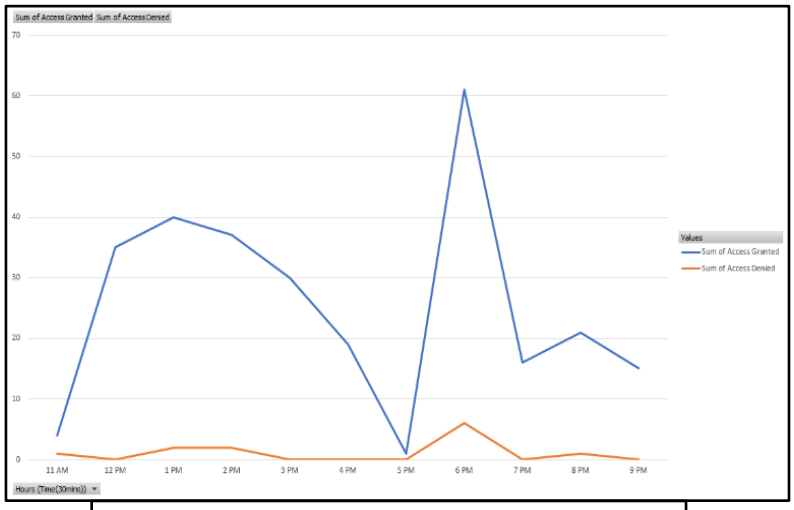

Figure 3 – Line graph representation of the total number of 'Access Granted' and 'Access Denied' attempts throughout the recorded hours.

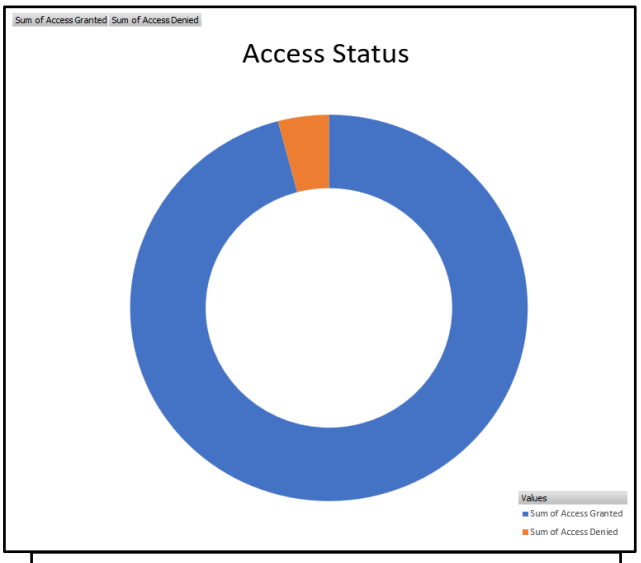

Figure 4 – Pie chart representation of the total number of access granted and access denied attempts.

Challenges and lessons learnt:

Some challenges with this project include the Hardware integration. Integrating multiple components such as the RFID scanner, Servo motor, data-logging shield and SD card resulted in some wiring and code adjustments. The initial SD card used was not formatted correctly and it took me a while to figure out why certain errors kept happening when saving data. Another challenge I encountered was powering the system independently of my computer. The servo motor, which required the most energy, presented a problem. Finding an appropriately sized battery to simultaneously power both the servo motor and the Arduino proved to be a difficulty.

Throughout the project, I have learnt the importance of regularly checking the status of logs on the SD card. Continuouly checking the saved data is crucial as it helps with early detection of malfunctions or unauthorised access attempts. Also, feedback from lecturers and teachers has been invaluable in the developmental process, giving me a fresh perspective on issues and enabling quicker resolutions.